table for unmentioned tolerance in the drawing (unit: mm)					
0-5	5-30	30-120	120-250	250-400	400-700
±0.15	±0.2	±0.5	±0.8	±1.5	±2

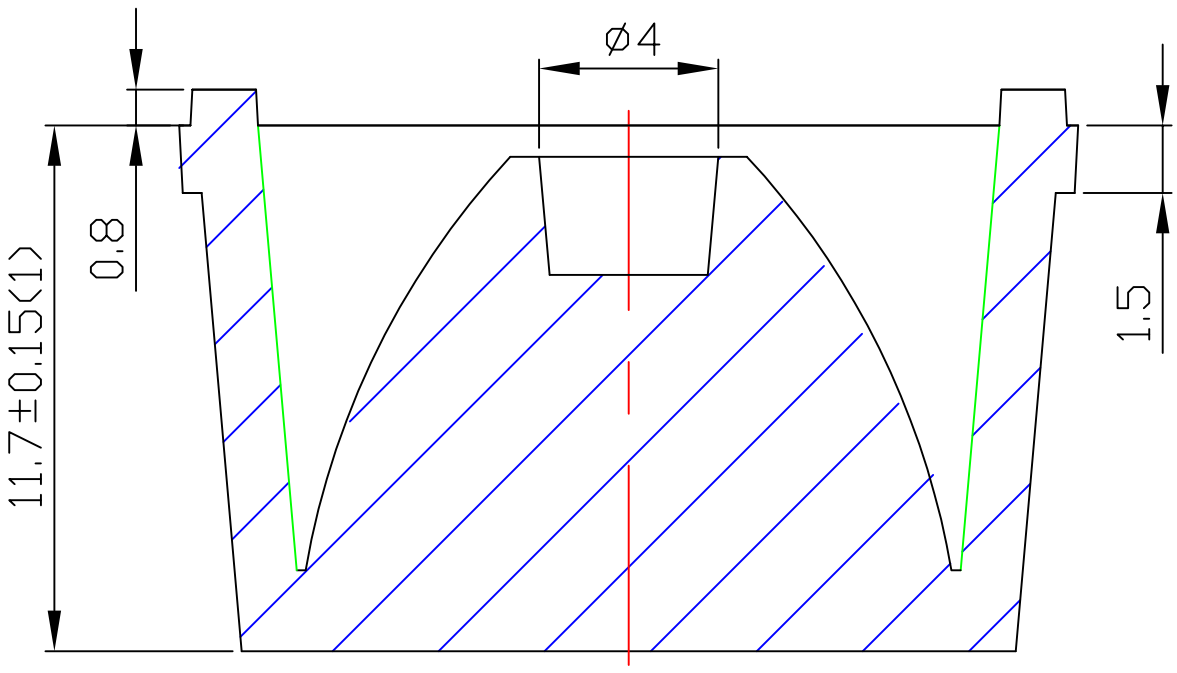

A—A

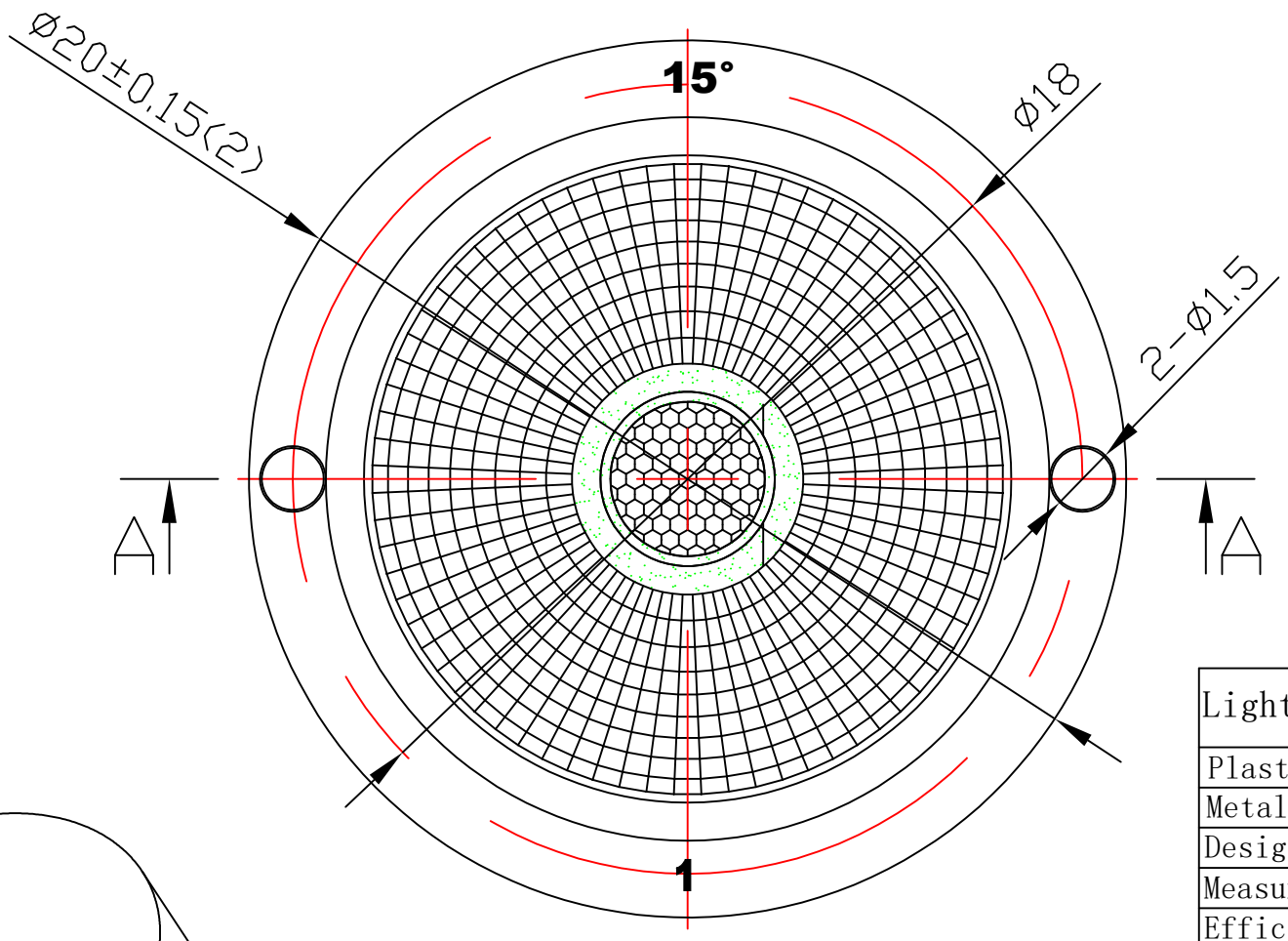

Light Source	NICHIA NF2W757
PlasticHolder	
Metal Adaptar	
Design Angle	15° ±3°
Measured Angle	15.4°
Efficiency	

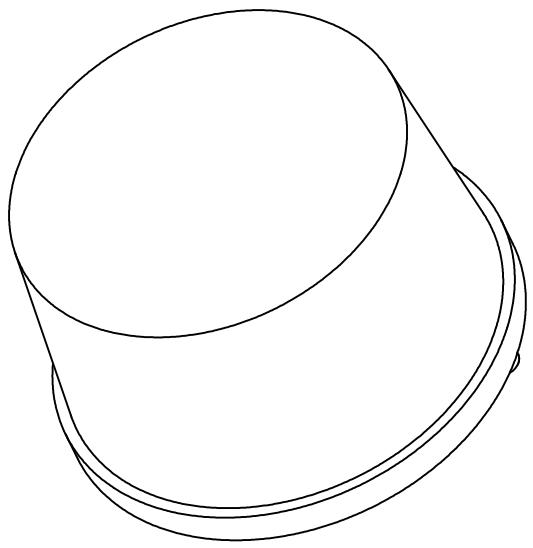

光学装配视图

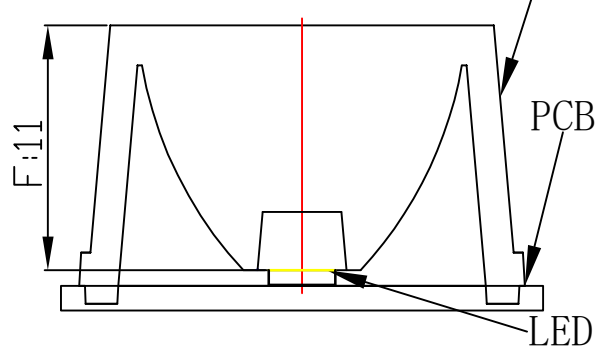

Material:PMMA

Nata®
NATA Lighting Co.,Ltd

Mark	Amended Times	Amended Content			Signature	Amended Date
Controll Version		A0	Design Version	K6	Client Version	
Designer			Drawing by		Proportion	1:1
Technology			Auditor		View	
Approval			Date	2019.05.28	Page	Total_ Page_

Customer Item	
Customer Code	NT
Product Number	
Product Name	NA01D020015BW