table for unmentioned tolerance in the drawing (unit: mm)					
0-5	5-30	30-120	120-250	250-400	400-700
±0.15	±0.2	±0.5	±0.8	±1.5	±2

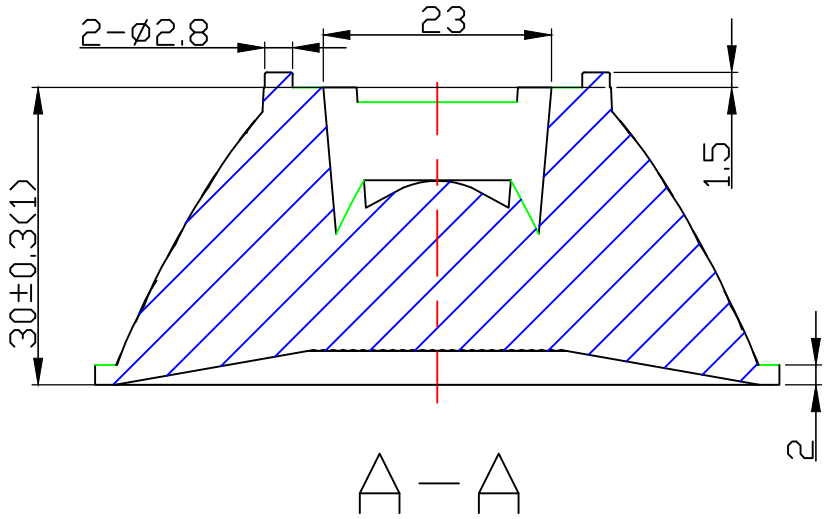

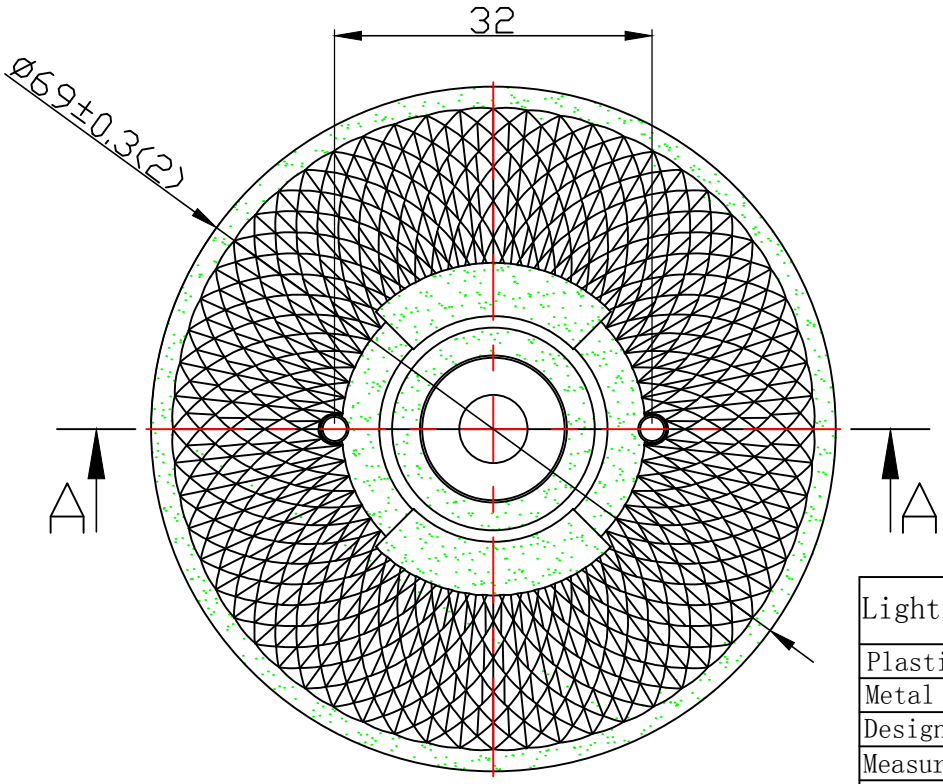

Light Source	LUMILEDS LUXEON CoB 1205
PlasticHolder	92.70.045.00
Metal Adaptar	
Design Angle	24° ±3°
Measured Angle	25.5°
Efficiency	

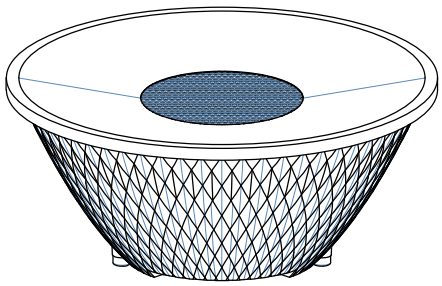

光学装配视图

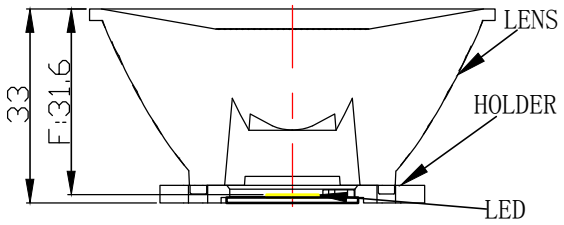

Material:PMMA

Nata®
NATA Lighting Co.,Ltd

Mark	Amended Times	Amended Content			Signature	Amended Date
Controll Version		A0	Design Version	K0	Client Version	
Designer			Drawing by		Proportion	1:1
Technology			Auditor		View	
Approval			Date	2018.08.25	Page	Total_ Page_

Customer Item	
Customer Code	NT
Product Number	
Product Name	LM01D06924BJ