table for unmentioned tolerance in the drawing (unit: mm)					
0-5	5-30	30-120	120-250	250-400	400-700
±0.15	±0.2	±0.5	±0.8	±1.5	±2

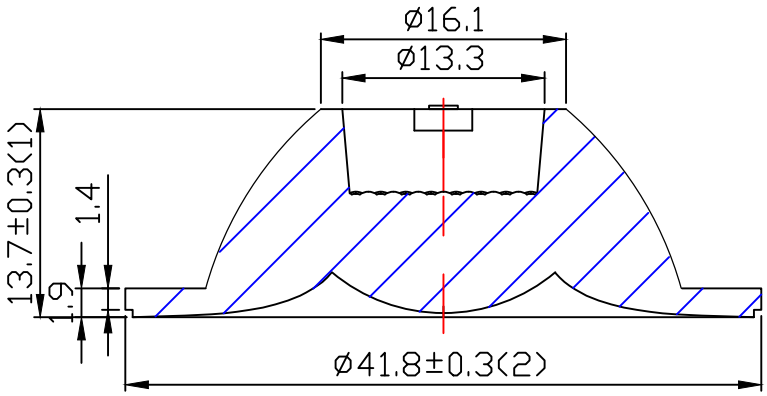

A—A

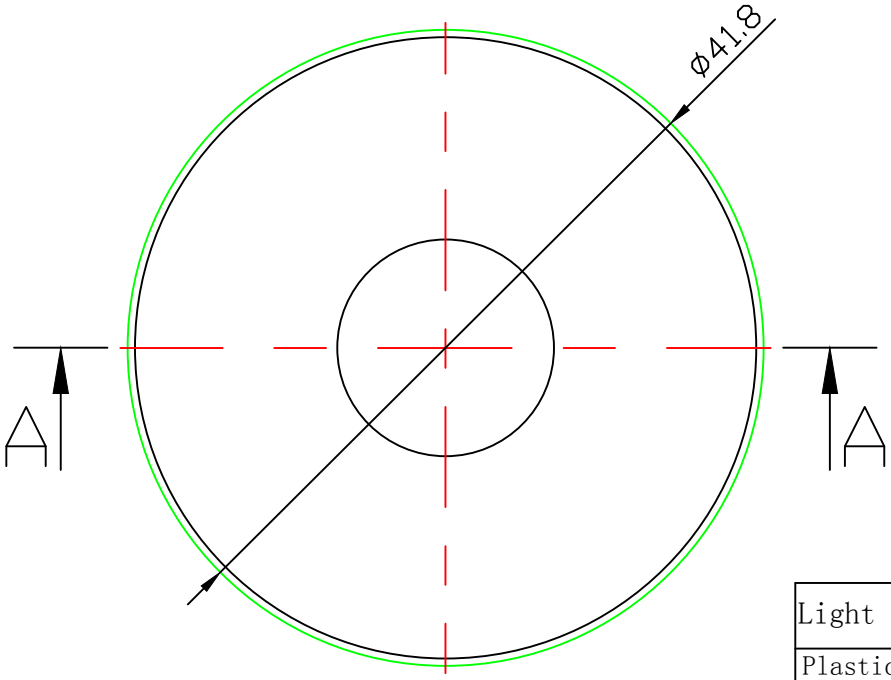

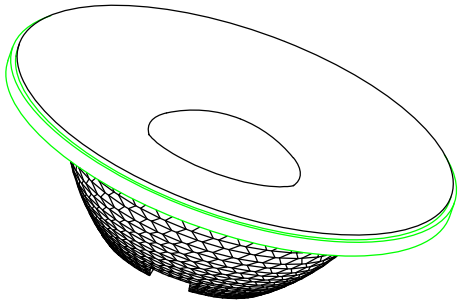

Light Source	CREE CXA1512
PlasticHolder	
Metal Adaptar	
Design Angle	38° ±3°
Measured Angle	38.2°
Efficiency	

光学装配视图

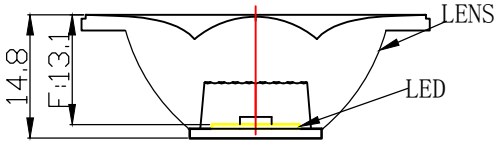

Material:PMMA

Nata®
NATA Lighting Co.,Ltd

Mark	Amended Times	Amended Content		Signature	Amended Date
Controll Version		A0	Design Version	K1	Client Version
Designer			Drawing by		Proportion 1:1
Technology			Auditor		View
Approval			Date	2018.11.07	Page Total_ Page_

Customer Item	
Customer Code	NT
Product Number	
Product Name	CR01D04438AK