table for unmentioned tolerance in the drawing (unit: mm)					
0-5	5-30	30-120	120-250	250-400	400-70
±0.15	±0.2	±0.5	±0.8	±1.5	±2

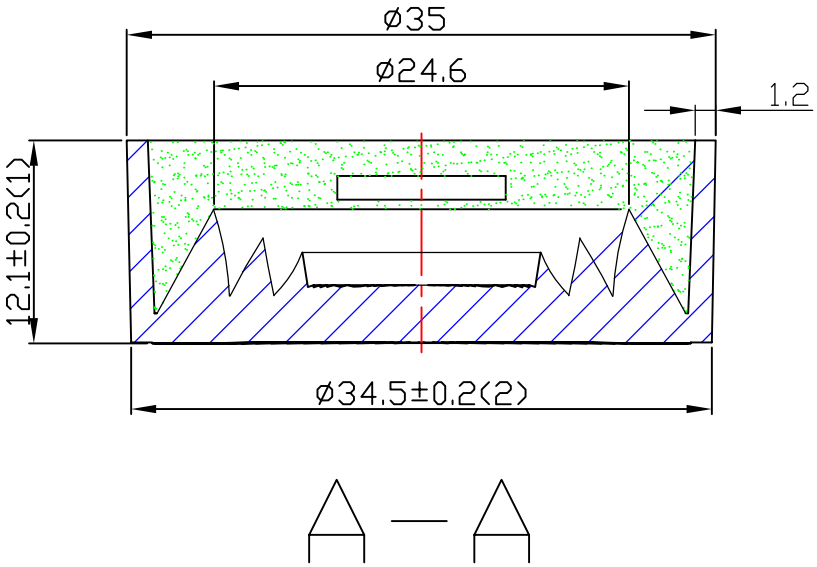

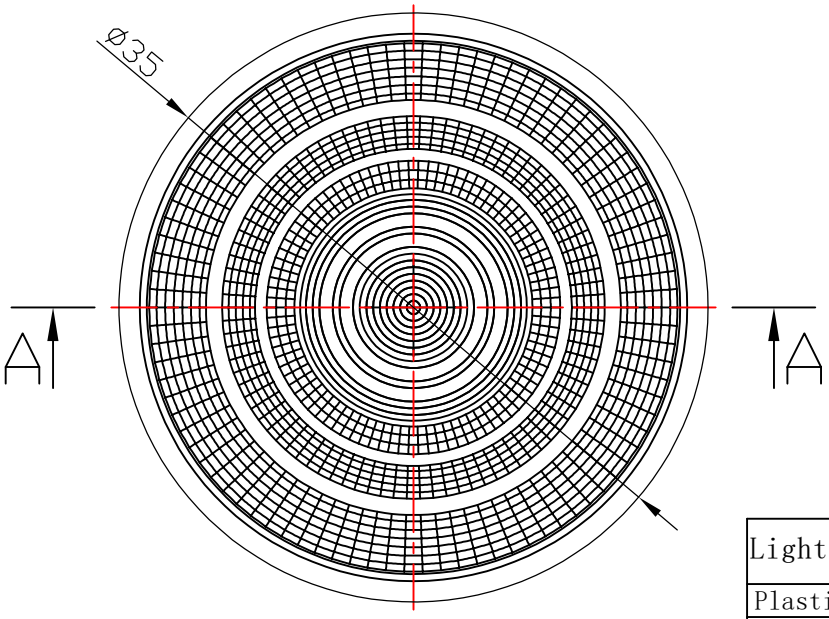

Light Source	CREE CXA1304
PlasticHolder	92.70.110.00
Metal Adaptar	
Design Angle	36° ±3°
Measured Angle	35.6°
Efficiency	

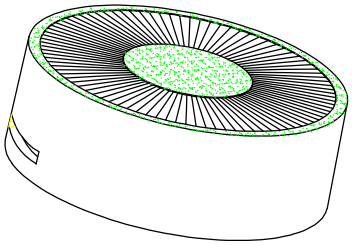

光学装配视图

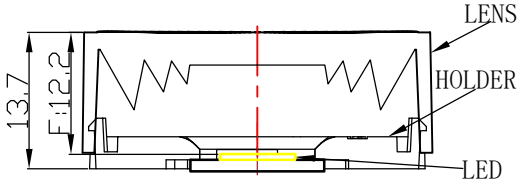

Material:PC

Nata®
NATA Lighting Co.,Ltd

Mark	Amended Times	Amended Content		Signature	Amended Date
Controll Version	A0	Design Version	K4	Client Version	
Designer		Drawing by		Proportion	1:1
Technology		Auditor		View	
Approval		Date	2018.12.06	Page	Total_ Page_

Customer Item	
Customer Code	NT
Product Number	
Product Name	CR01D03536BM