table for unmentioned tolerance in the drawing (unit: mm)					
0-5	5-30	30-120	120-250	250-400	400-70(
±0.15	±0.2	±0.5	±0.8	±1.5	±2

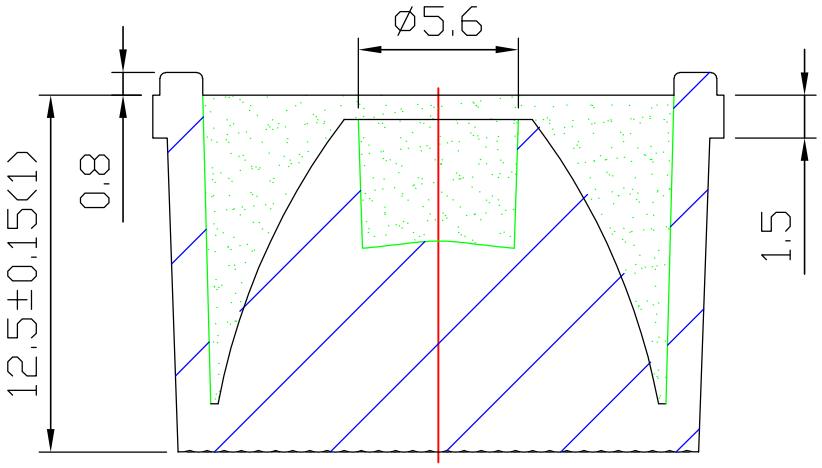

A — A

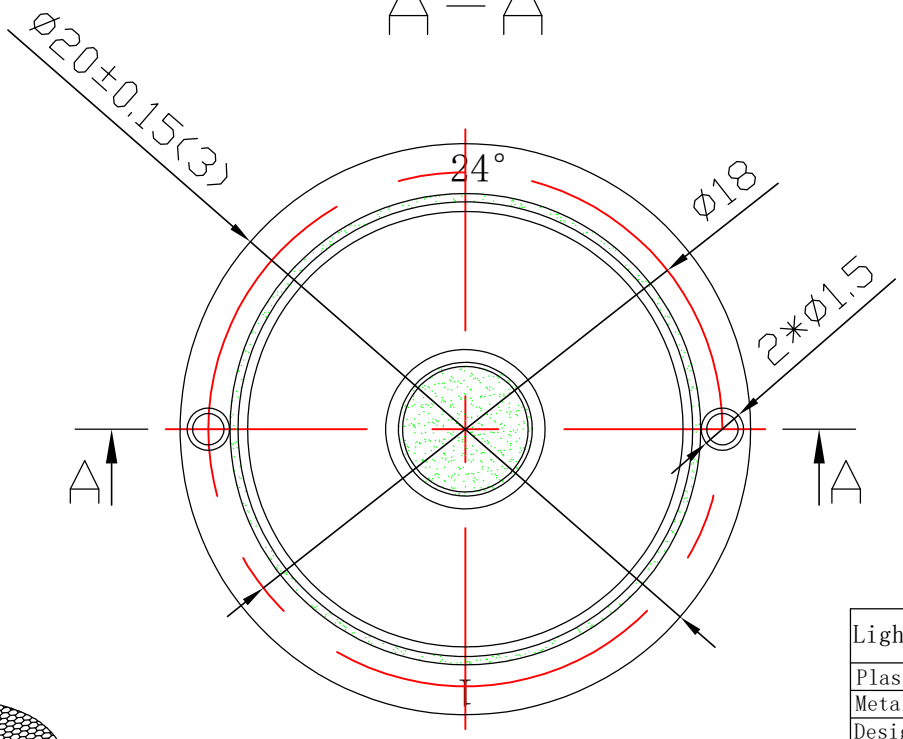

Light Source	CREE XPE2
PlasticHolder	
Metal Adaptar	
Design Angle	38° ±3°
Measured Angle	39°
Efficiency	

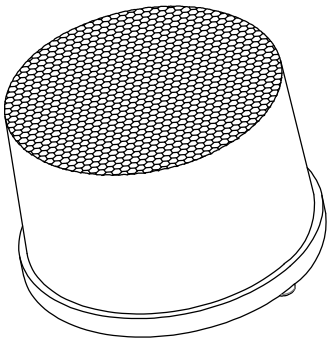

光学装配视图

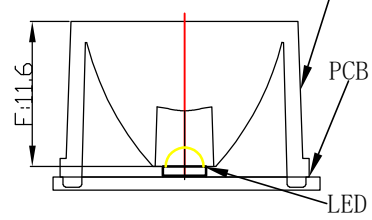

Material:PMMA

Nata®
NATA Lighting Co.,Ltd

Mark	Amended Times	Amended Content		Signature	Amended Date
Controll Version		A0	Design Version	K0	Client Version
Designer			Drawing by		Proportion 1:1
Technology			Auditor		View
Approval			Date	2019.06.17	Page Total_ Page_

Customer Item	
Customer Code	NT
Product Number	
Product Name	CR01D020038BW