table for unmentioned tolerance in the drawing (unit: mm)			punch angle tolerance in the drawing (unit:degree)		
0-5	5-30	30-120	0-10	10-50	50-120
±0.15	±0.2	±0.5	±1°	±0.5°	±0.3°
120-250	250-400	400-700	120-250	250-360	360 abov
±0.8	±1.5	±2	±0.2°	±0.166°	±0.083°

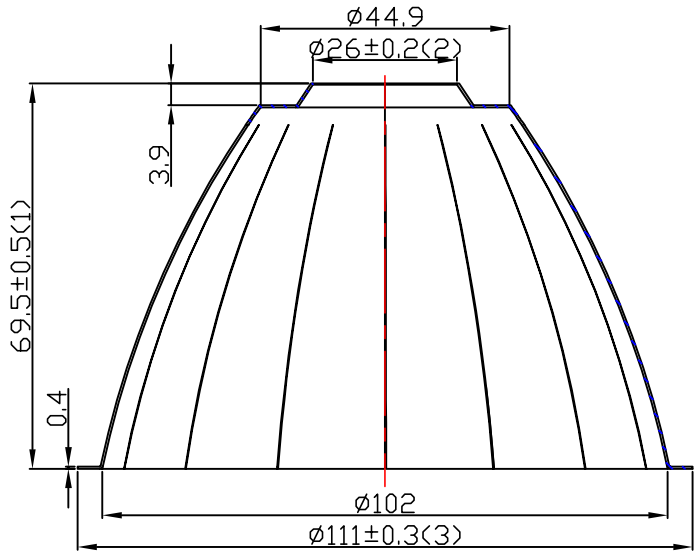

A—A

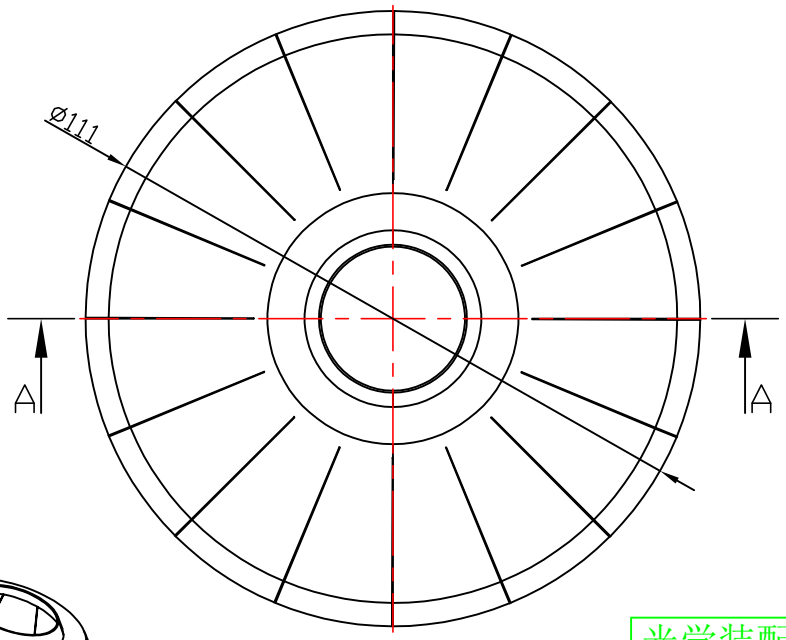

Light Source	Lumileds Luxeon Cob 120
PlasticHolder	92.70.135.0(
Metal Adaptar	
Design Angle	15° ±3°
Measured Angle	15.6°

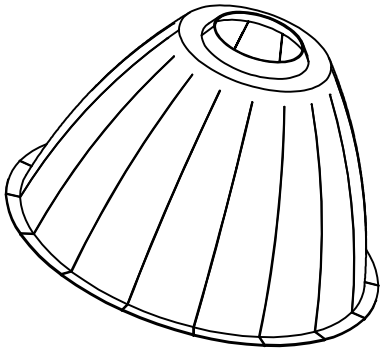

光学装配示意图

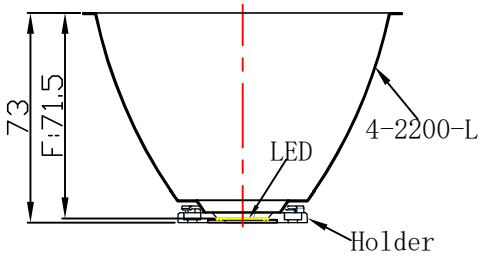

Material:T=0.4 MIRO 98AX20

Nata®
NATA Lighting Co.,Ltd

Mark	Amended Times	Amended Content			Signature	Amended Date
Controll Version		A0	Design Version	K0	Client Version	
Designer			Drawing by		Proportion	1:1
Technology			Auditor		View	
Approval			Date	2019.05.23	Page	Total Page

Customer Item	
Customer Code	NT
Product Number	
Product Name	4-2200-L