table for unmentioned tolerance in the drawing (unit: mm)			punch angle tolerance in the drawing (unit:degree)		
0-5	5-30	30-120	0-10	10-50	50-120
±0.15	±0.2	±0.5	±1°	±0.5°	±0.3°
120-250	250-400	400-700	120-250	250-360	360 above
±0.8	±1.5	±2	±0.2°	±0.166°	±0.083°

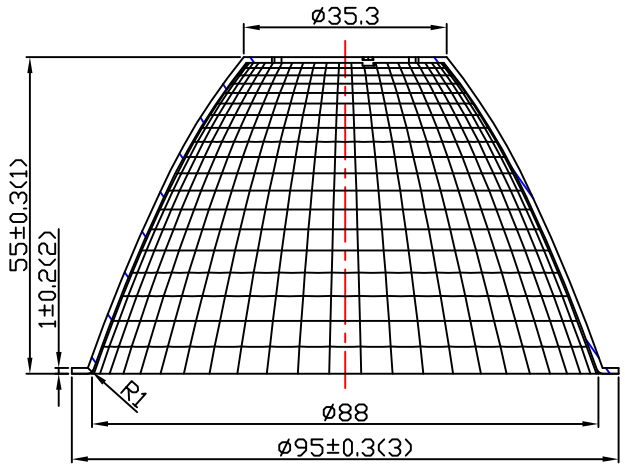

A—A

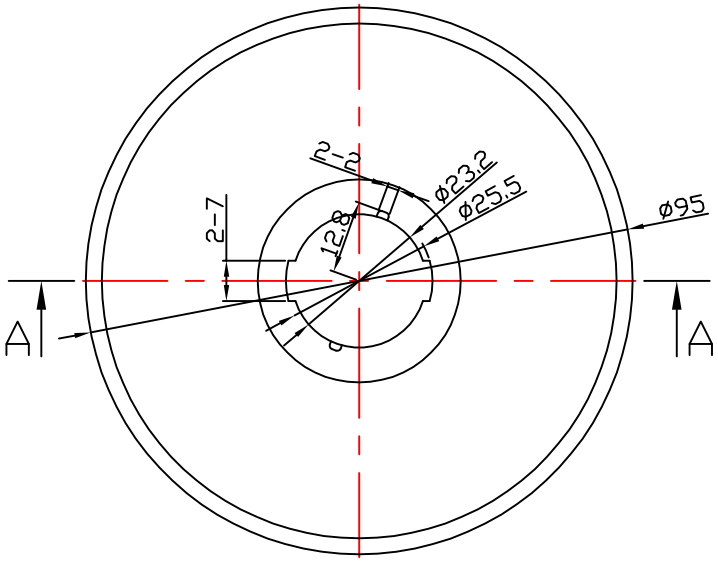

Light Source	PHILIPS SLM92757TWL112024G1
PlasticHolder	
Maxing dome	92.70.153.00
Metal Adaptar	
Design requiremengt	15° ±3°
Measured result	15.6°

光学装配示意图

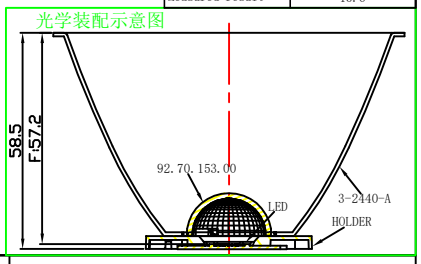

Material:T=1.0 1090AL

Nata®
NATA Lighting Co.,Ltd

Mark	Amended Times	Amended Content		Signature	Amended Date
Controll Version	A0	Design Version	K0	Client Version	
Designer		Drawing by		Proportion	1:1
Technology		Auditor		View	
Approval		Date	2019.11.18	Page	Total_ Page_

Customer Item	OD95mm调光反光杯15°
Customer Code	NT
Product Number	91.03.2440.000
Product Name	3-2440-A