| table for unmentioned tolerance in the drawing (unit: mm) | | | punch angle tolerance in the drawing (unit:degree) | | |
|---|---|---|---|---|---|
| 0-5 | 5-30 | 30-120 | 0-10 | 10-50 | 50-120 |
| ±0.15 | ±0.2 | ±0.5 | ±1° | ±0.5° | ±0.3° |
| 120-250 | 250-400 | 400-700 | 120-250 | 250-360 | 360 above |
| ±0.8 | ±1.5 | ±2 | ±0.2° | ±0.166° | ±0.083° |

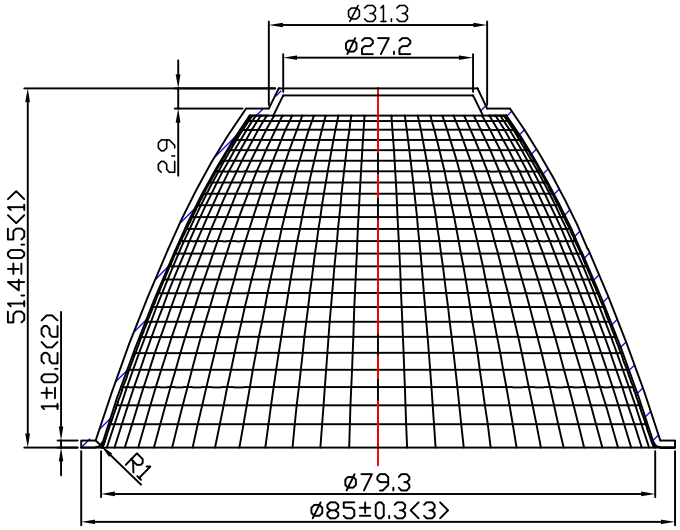


A—A

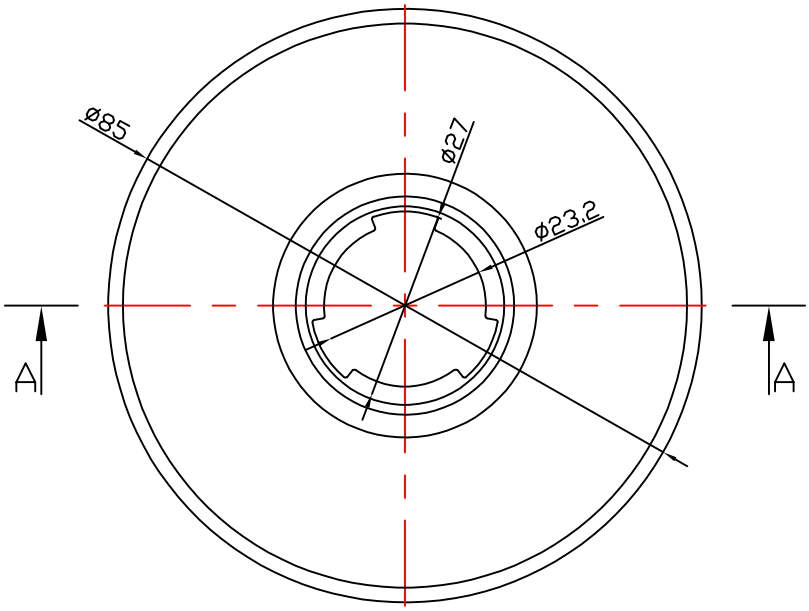


| | |
|---|---|
| Light Source | CREE CXA1830 |
| PlasticHolder | 99.02.73.180 |
| Metal Adaptar | 92.76.323.00 |
| Design Angle | 15° ±3° |
| Measured Angle | 14.5° |
| Efficiency | |

光学装配示意图

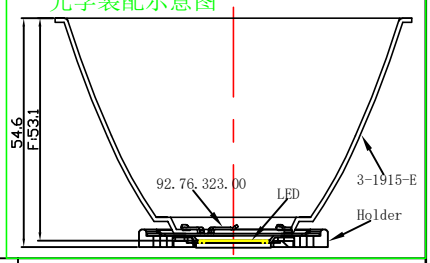


Material:T=1.0
1090AL

Nata®
NATA Lighting Co.,Ltd

| Mark | Amended Times | Amended Content | | Signature | Amended Date |
|---|---|---|---|---|---|
| Controll Version | | A0 | Design Version | K1 | Client Version |
| Designer | | | Drawing by | | Proportion 1:1 |
| Technology | | | Auditor | | View |
| Approval | | | Date | 2018.03.09 | Page Total_ Page_ |

| | |
|---|---|
| Customer Item | |
| Customer Code | NT |
| Product Number | |
| Product Name | 3-1915-E |