Product bill of material				
Serial number	Material Name	Masterial Number	NO.	Describe
①	3-1881-S	94.03.1881.000	1	Material:PC
②	D90防尘镜片	97.70.063.00	1	Material:PC

table for unmentioned tolerance in the drawing (unit: mm)					
0-5	5-30	30-120	120-250	250-400	400-700
±0.15	±0.2	±0.5	±0.8	±1.5	±2

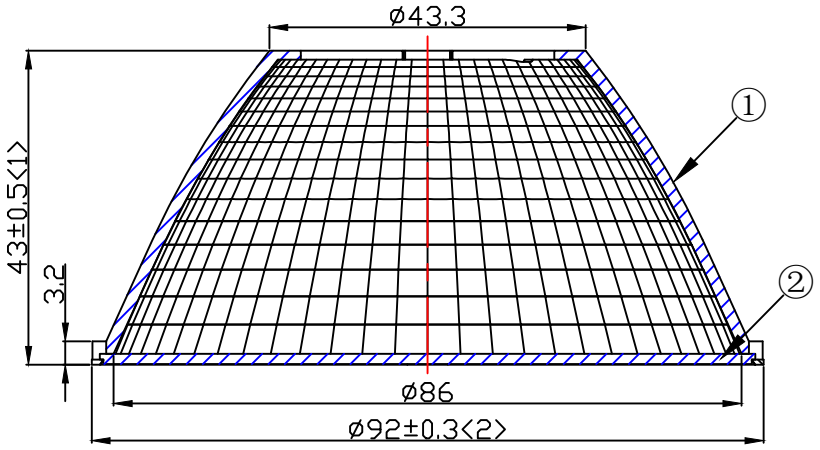

A—A

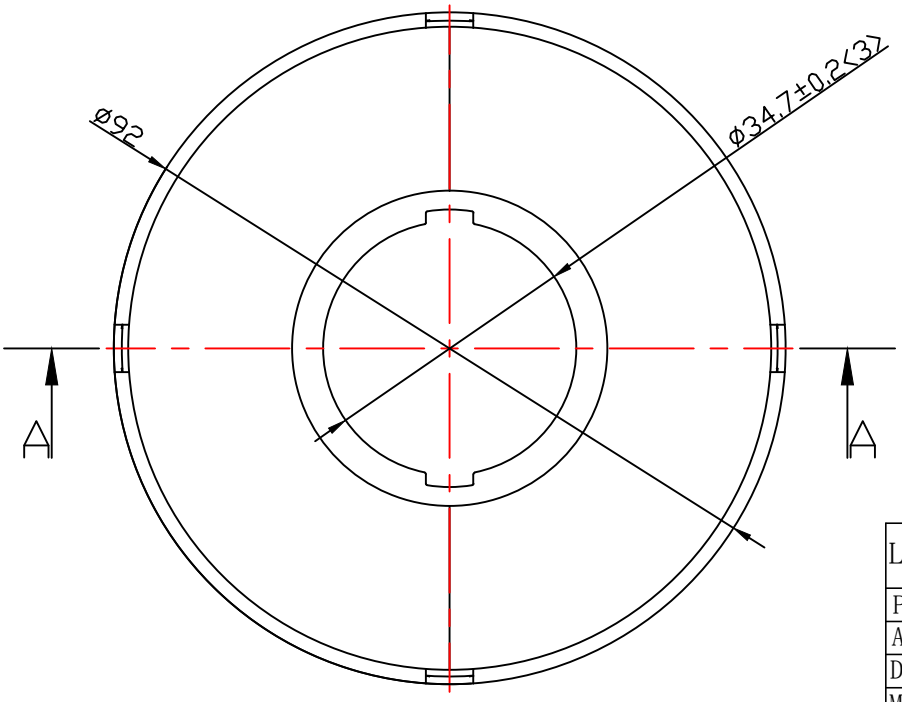

Light Source	CREE CXA2520
PlasticHolder	92.70.045.00
Adaptar	92.70.061.00
Design Angle	20° ±3°
Measured Angle	20°
Efficiency	

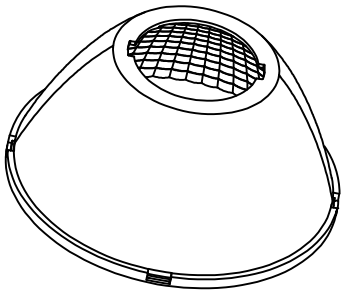

光学装配示意图

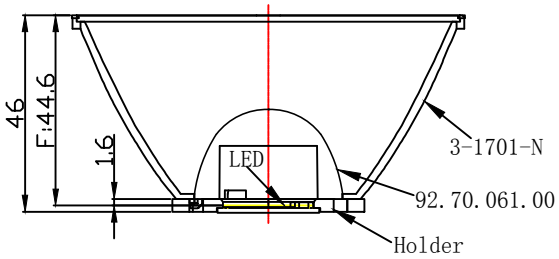

Nata®
NATA Lighting Co.,Ltd

Mark	Amended Times	Amended Content		Signature	Amended Date
Controll Version	A0	Design Version	K1	Client Version	
Designer		Drawing by		Proportion	1:1
Technology		Auditor		View	
Approval		Date	2018.09.29	Page	Total_ Page_

Customer Item	
Customer Code	NT
Product Number	
Product Name	3-1701-N