table for unmentioned tolerance in the drawing (unit: mm)			punch angle tolerance in the drawing (unit:degree)		
0-5	5-30	30-120	0-10	10-50	50-120
±0.15	±0.2	±0.5	±1°	±0.5°	±0.3°
120-250	250-400	400-700	120-250	250-360	360 above
±0.8	±1.5	±2	±0.2°	±0.166°	±0.083°

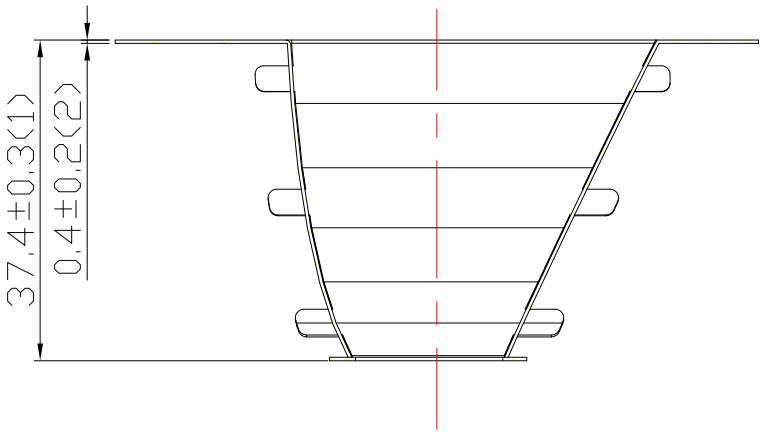

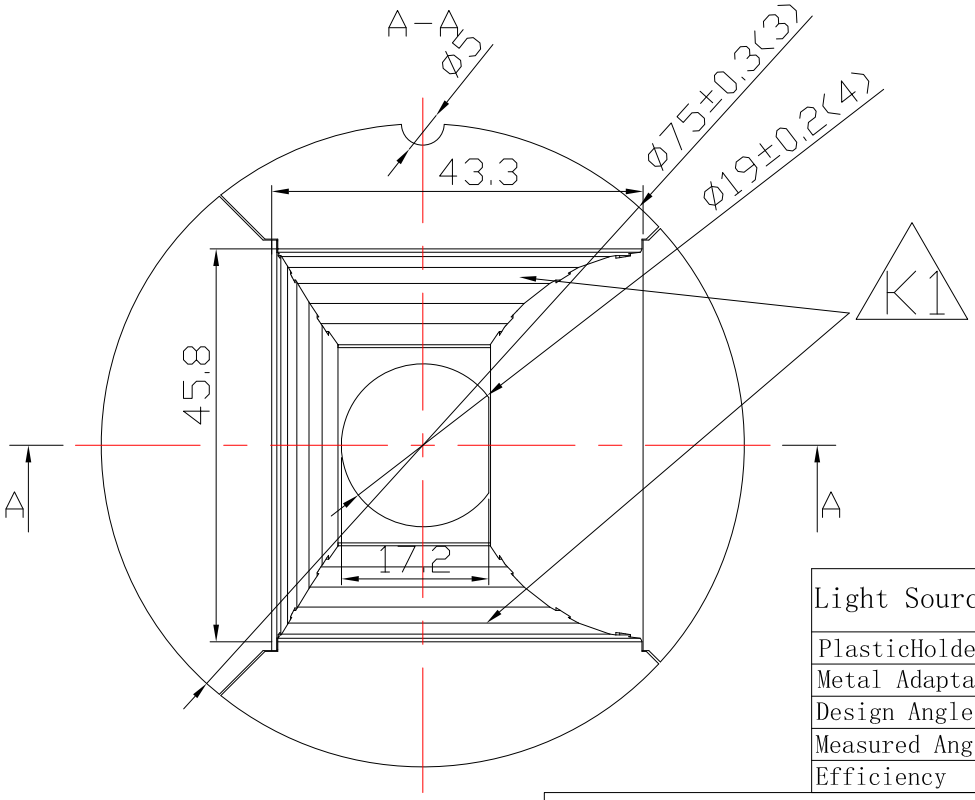

Light Source	LUMILEDS 1208
PlasticHolder	92.70.135.00
Metal Adaptar	
Design Angle	偏光16° ±3°
Measured Angle	
Efficiency	

ASSEMBLY DRAWINGS

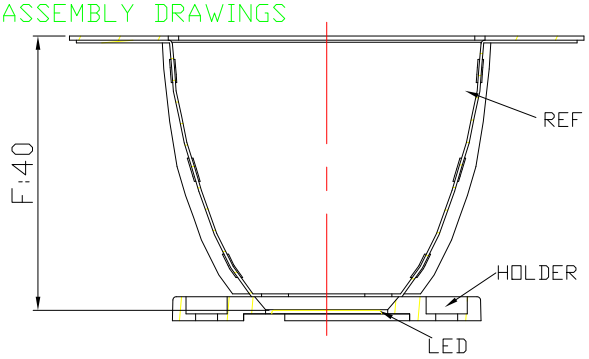

技术要求:

1. 材质:0.4 miro4AL。
2. 表面处理:无。
3. 产品未注公差参考未注公差表。

Mark	Amended Times	Amended Content			Signature	Amended Date
K1	1	更改光学面，装配孔位随之更改。			JL	2021.05.25
Controll Version		A0	Design Version	K0	Client Version	
Designer		林工	Drawing by		Proportion	1:1
Technology			Auditor		View	
Approval			Date	2021.05.25	Page	Total_ Page_

Engineering drawings

Nata®

Customer Item	D75-偏光切合反光杯
Customer Code	NT
Product Number	91.02.2323.00
Product Name	3-2323-M