Product bill of material

Serial number	material name	Masterial number	NO.	Describe
①	2-2005-A	94.02.2005.000	1	材料:T=AL 1.0 1090AL
②	D43不锈钢卡环	97.76.368.000	1	材料:T=0.6 SUS304

table for unmentioned tolerance in the drawing (unit: mm)			punch angle tolerance in the drawing (unit:degree)		
0-5	5-30	30-120	0-10	10-50	50-120
±0.15	±0.2	±0.5	±1°	±0.5°	±0.3°
120-250	250-400	400-700	120-250	250-360	360 abov
±0.8	±1.5	±2	±0.2°	±0.166°	±0.083°

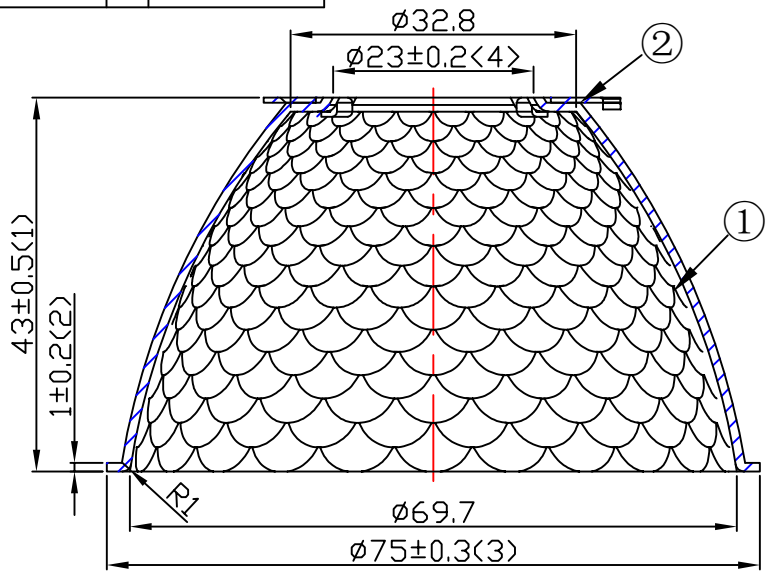

A—A

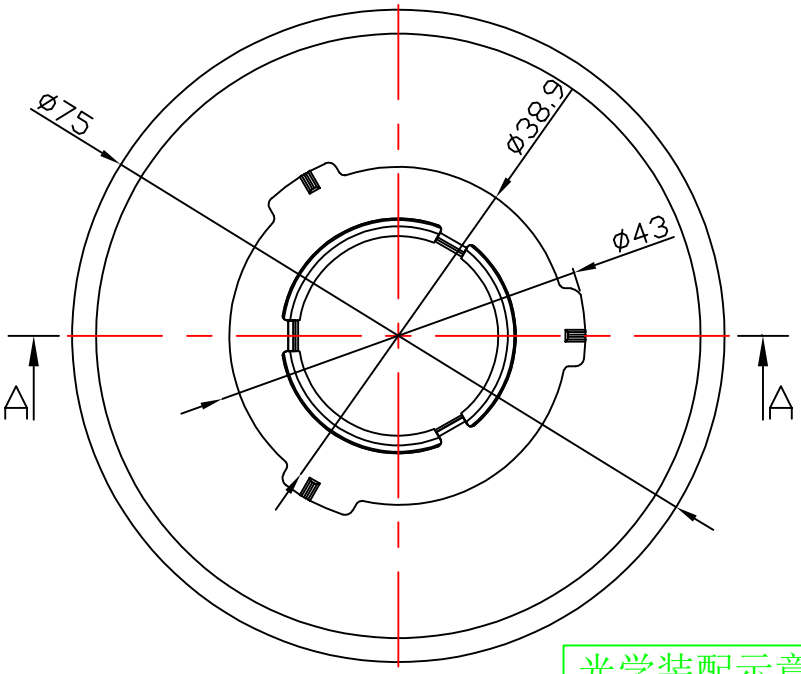

Light Source	LUMILEDS LUXEON 1205
PlasticHolder	92.70.135.00
Metal Adaptar	
Design Angle	24±3°
Measured Angle	25.2°
Efficiency	

光学装配示意图

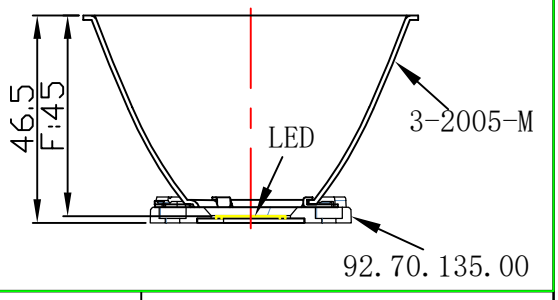

Material:AL 1.0A
ø100反光杯

Nata®
NATA Lighting Co.,Ltd

Mark	Amended Times	Amended Content		Signature	Amended Date
Controll Version	A0	Design Version	K1	Client Version	
Designer		Drawing by		Proportion	1:1
Technology		Auditor		View	
Approval		Date	2019.04.17	Page	Total Page

Customer Item	
Customer Code	NT
Product Number	
Product Name	2-2006-M