table for unmentioned tolerance in the drawing (unit: mm)			punch angle tolerance in the drawing (unit:degree)		
0-5	5-30	30-120	0-10	10-50	50-120
±0.15	±0.2	±0.5	±1°	±0.5°	±0.3°
120-250	250-400	400-700	120-250	250-360	360 above
±0.8	±1.5	±2	±0.2°	±0.166°	±0.083°

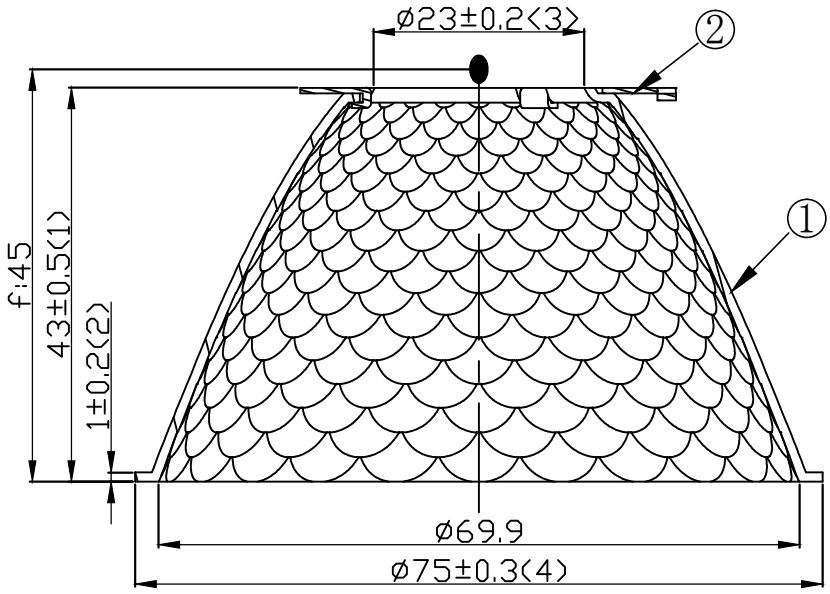

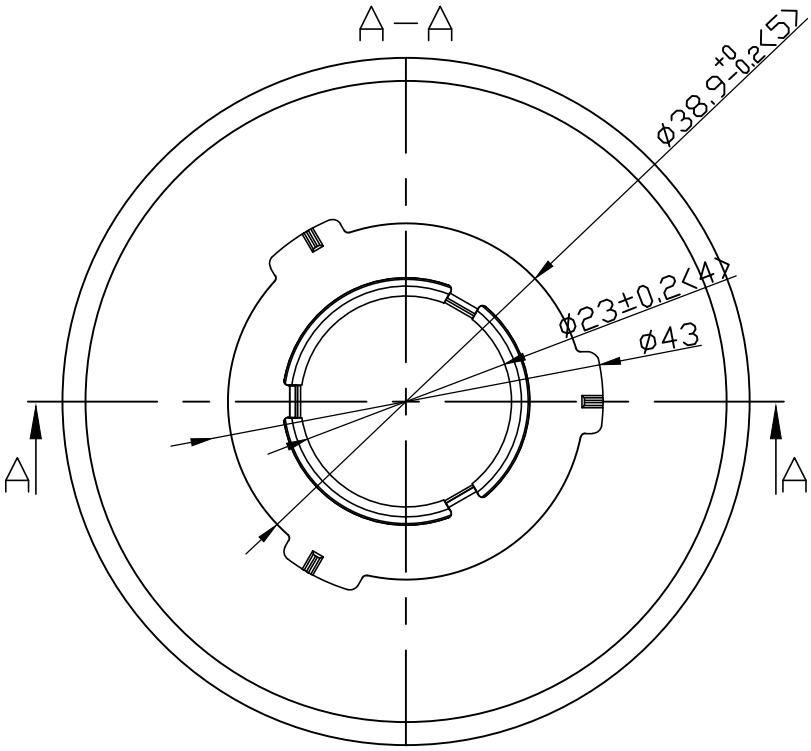

Light Source	LUXEON COB 1205
PlasticHolder	92.70.135.00
Metal Adaptar	
Design Angle	15° ±3°
Measured Angle	16.7°
Efficiency	

Product bill of material

Serial number	material name	Masterial number	NO.	Pagunation	Describe
①	2-2003-A	94.02.2003.000	1	2	Material:AL 1.0 1070AL
②	D43*H:0.6	97.76.368.00	1	4	Material:T:0.6 304

Material:T:1.0 1070AL

Nata®
NATA Lighting Co.,Ltd

Mark	Amended Times	Amended Content			Signature	Amended Date
Controll Version		A0	Design Version	K1	Client Version	
Designer			Drawing by		Proportion	1:1
Technology			Auditor		View	
Approval			Date	2019.05.16	Page	Total_ Page_

Customer Item	
Customer Code	NT
Product Number	91.02.2004.000
Product Name	2-2004-M