table for unmentioned tolerance in the drawing (unit: mm)			punch angle tolerance in the drawing (unit:degree)		
0-5	5-30	30-120	0-10	10-50	50-120
±0.15	±0.2	±0.5	±1°	±0.5°	±0.3°
120-250	250-400	400-700	120-250	250-360	360 above
±0.8	±1.5	±2	±0.2°	±0.166°	±0.083°

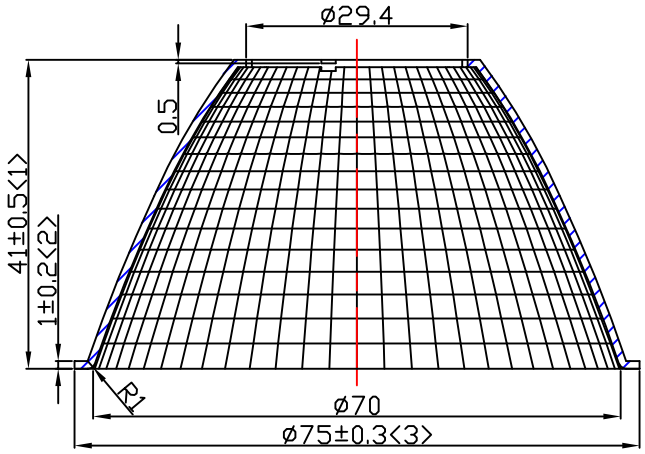

A—A

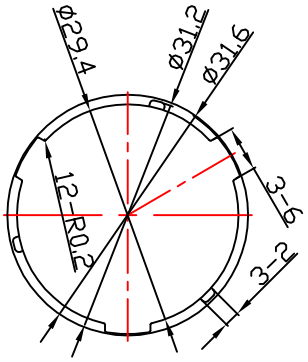

底孔视图1:1

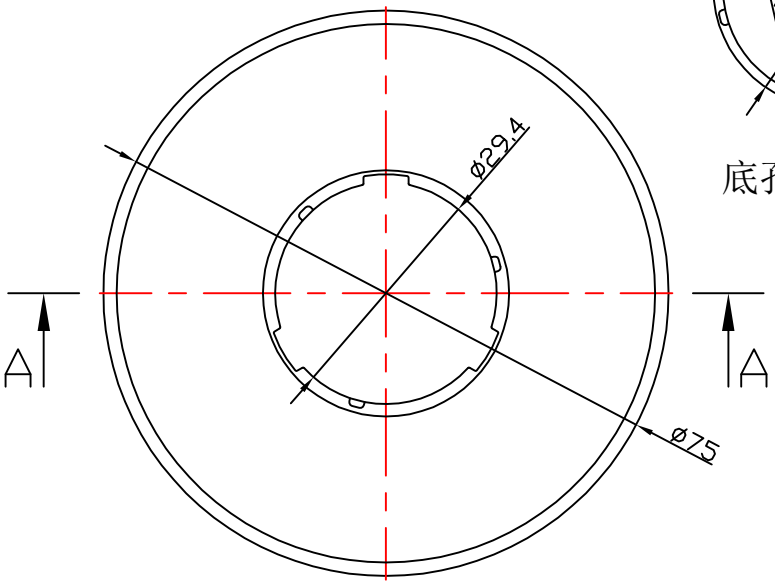

Light Source	CREE CXA1816 LES12
PlasticHolder	92.70.129.00
Metal Adaptar	
ADAPTER	92.70.148.00
Design Angle	18° ±3°
Measured Angle	17.2°
Efficiency	

光学装配示意图

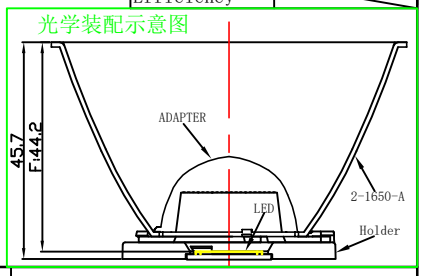

Material:T=1.0
1090AL

Nata®
NATA Lighting Co.,Ltd

Mark	Amended Times	Amended Content		Signature	Amended Date
Controll Version	A0	Design Version	K0	Client Version	
Designer		Drawing by		Proportion	1:1
Technology		Auditor		View	
Approval		Date	2018.12.28	Page	Total_ Page_

Customer Item	
Customer Code	NT
Product Number	
Product Name	2-1650-A