table for unmentioned tolerance in the drawing (unit: mm)			punch angle tolerance in the drawing (unit:degree)		
0-5	5-30	30-120	0-10	10-50	50-120
±0.15	±0.2	±0.5	±1°	±0.5°	±0.3°
120-250	250-400	400-700	120-250	250-360	360 above
±0.8	±1.5	±2	±0.2°	±0.166°	±0.083°
"*" Marked for key control dimensions					

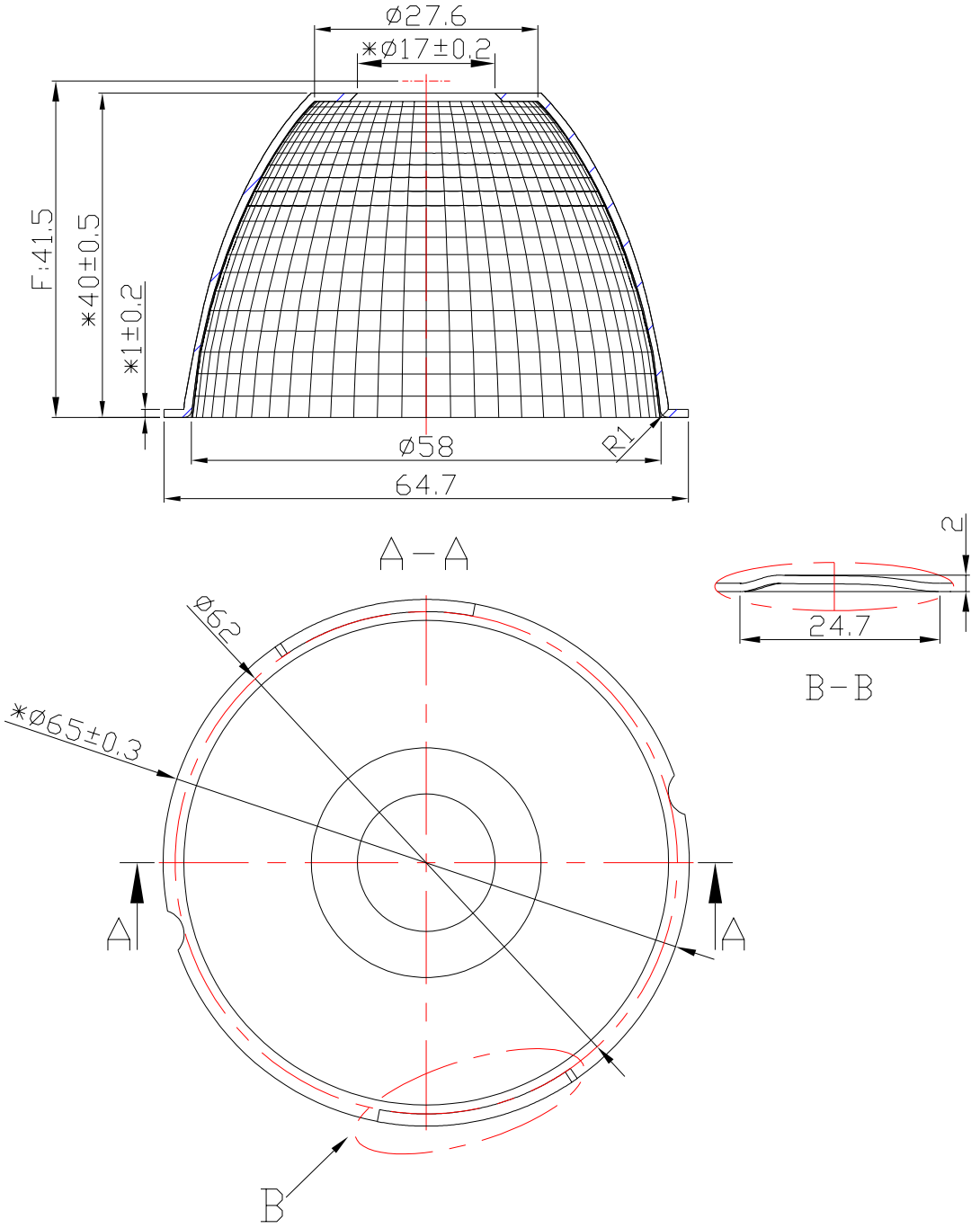

Technical requirements:
1. Material: t=1.0mm 1090AL.
2. Surface treatment: standard light.
3. Product untolerance reference untolerance table.

Light Source	CREE CXA1820 LES12
PlasticHolder	92.70.074.00
Metal Adaptar	
Design Angle	24° ±3°
Measured Angle	23.8°
Efficiency	

Mark	Amended Times	Amended Content			Signature	Amended Date
Controll Version		A1	Design Version	K0	Client Version	
Designer			Drawing by		Proportion	1:1
Technology			Auditor		View	
Approval			Date	2016.12.28	Page	Total_ Page_

Engineering drawings

Nata®

Customer Item	
Customer Code	NT
Product Number	91.02.1317.000
Product Name	2-1317-E