table for unmentioned tolerance in the drawing (unit: mm)			punch angle tolerance in the drawing (unit:degree)		
0-5	5-30	30-120	0-10	10-50	50-120
±0.15	±0.2	±0.5	±1°	±0.5°	±0.3°
120-250	250-400	400-700	120-250	250-360	360 abo
±0.8	±1.5	±2	±0.2°	±0.166°	±0.083

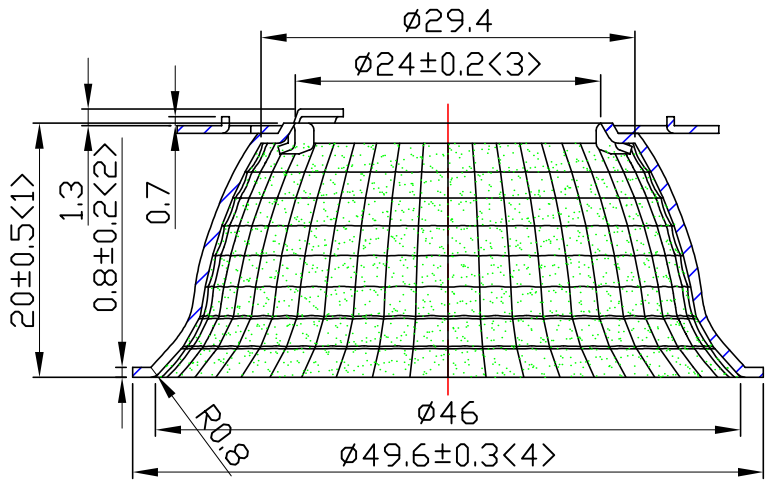

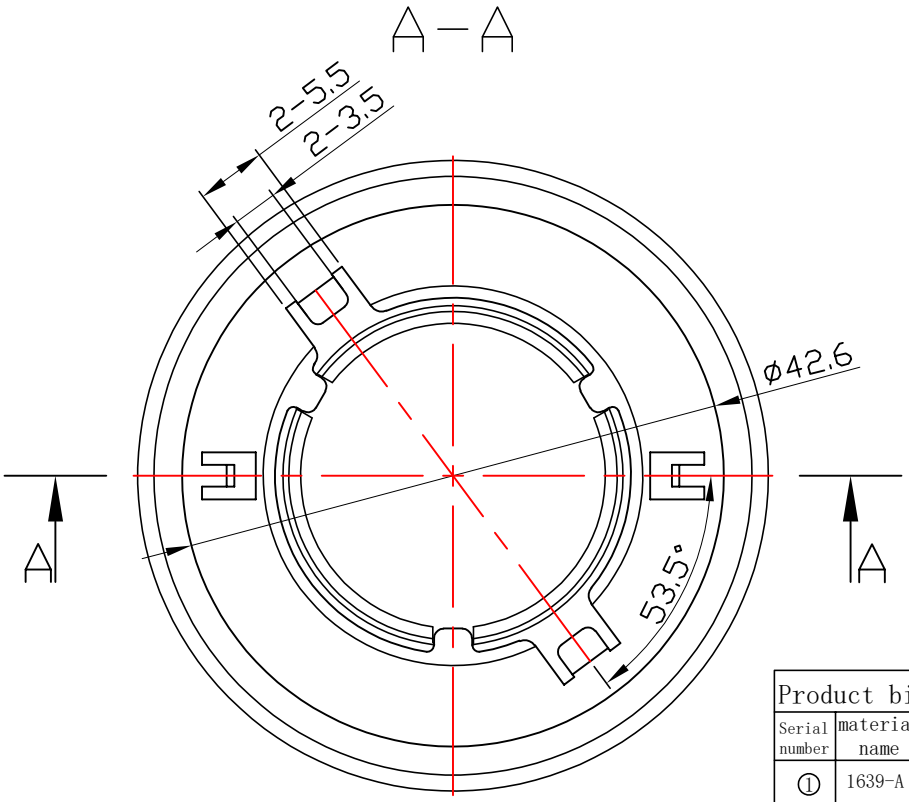

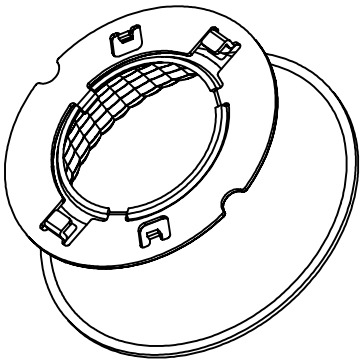

Light Source	CREE CXA1512
PlasticHolder	BJB 47.319.610
Metal Adaptar	
Design Angle	65° ±5°
Measured Angle	67.2°
Efficiency	

Product bill of material

Serial number	material name	Masterial number	NO.	Pagunation	Describe
①	1639-A	94.01.0639.000	1	2	Material: T=0.8mm 1090
②	020359	97.76.359.00	1	3	Material: T=0.6mm SUS3

光学装配示意图

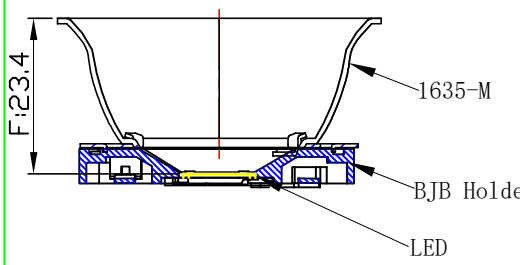

Mark	Amended Times	Amended Content			Signature	Amended Date
Controll Version		A0	Design Version	K0	Client Version	
Designer			Drawing by		Proportion	1:1
Technology			Auditor		View	
Approval			Date	2018 07 01	Page	Total Page

Nata®
NATA Lighting Co.,Ltd

Customer Item	
Customer Code	NT
Product Number	
Product Name	1635-M