table for unmentioned tolerance in the drawing (unit: mm)			punch angle tolerance in the drawing (unit:degree)		
0-5	5-30	30-120	0-10	10-50	50-120
±0.15	±0.2	±0.5	±1°	±0.5°	±0.3°
120-250	250-400	400-700	120-250	250-360	360 above
±0.8	±1.5	±2	±0.2°	±0.166°	±0.083°

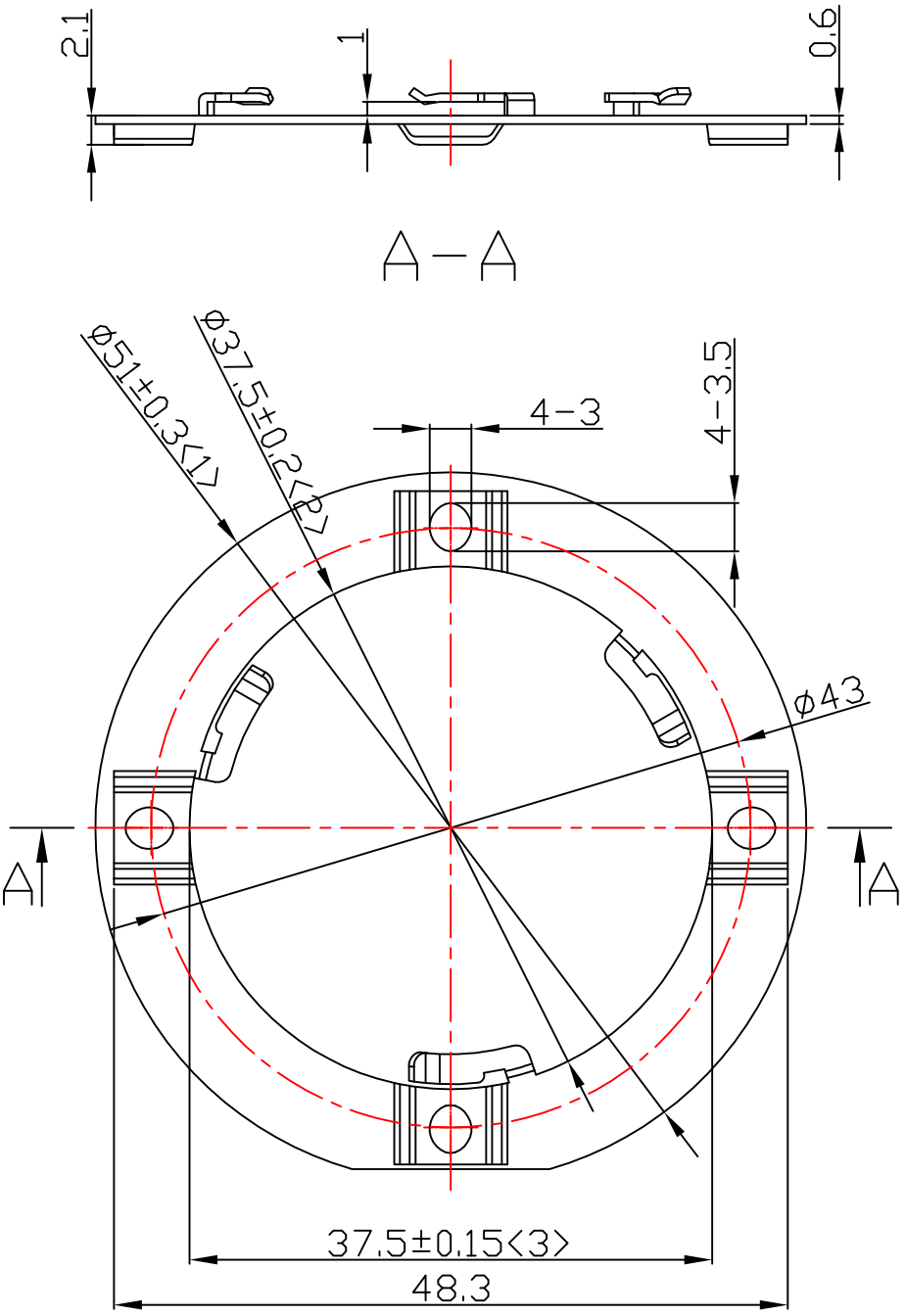

						Material:T=0.6 SS304					Nata® NATA Lighting Co.,Ltd	
Mark	Amended Times	Amended Content			Signature	Amended Date					Customer Item	
Controll Version		A0	Design Version	K0	Client Version						Customer Code	NT
Designer			Drawing by		Proportion	1:1					Product Number	92.76.227.00
Technology			Auditor		View						Product Name	020227
Approval			Date	2019.05.15	Page	Total_ Page_						