Dimensions in "*" are critical size

Undefined tolerances according to GB/T14486-2008-MT6

(单位：mm)

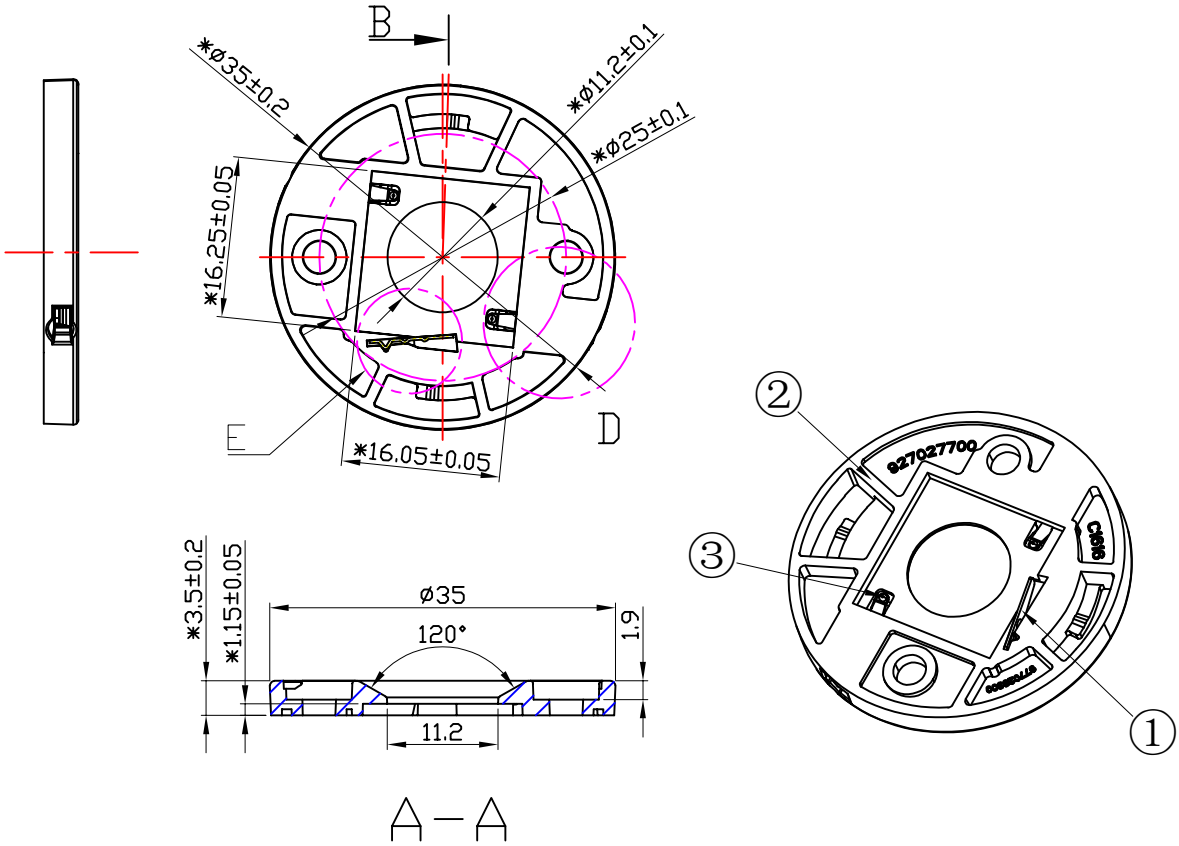


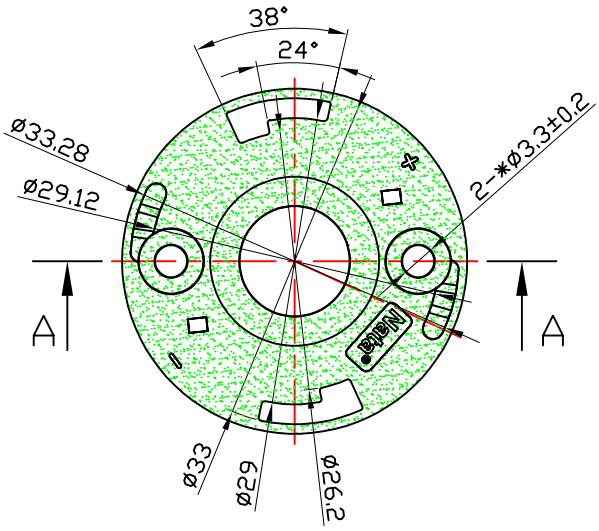


Technical Requirements:

1. Material :PBT, in line with ROHS certification.
2. White frosted surface.
3. Electric wires: 0.32mm²~0.81mm², 18AWG, 20AWG, 22AWG, Tin plating after stripping 6mm

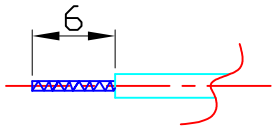


| | | | | | | | | | | | |
|---|---|---|---|---|---|---|---|---|---|---|---|
| 标记 Mark | 处数 Amended Times | 更改内容 Amended Content | | 签 名 Signature | 更改日期 Amended Date | | | | | P/N: 92.70.277.00 | 版本/REV K7 |
| 设 计 Designer | | 制 图 Drawing by | | 比 例 Proportion | 1:1 | | 部件图 Engineering drawings | | | 产品名称 Product Name | C1616单色免焊支架D35H3.5 |
| 工 艺 Technology | | 审 核 Auditor | | 视 角 View | | 图档路径 The path of file | | | | 客户代号 Customer Code | NT |
| 批 准 Approval | | 日 期 Date | 2020.04.13 | 页 数 Page | 共1页 第1页 | | | | | 客户编号 Customer Item | |

Nata®