table for unmentioned tolerance in the drawing (unit: mm)					
0-5	5-30	30-120	120-250	250-400	400-700
±0.15	±0.2	±0.5	±0.8	±1.5	±2

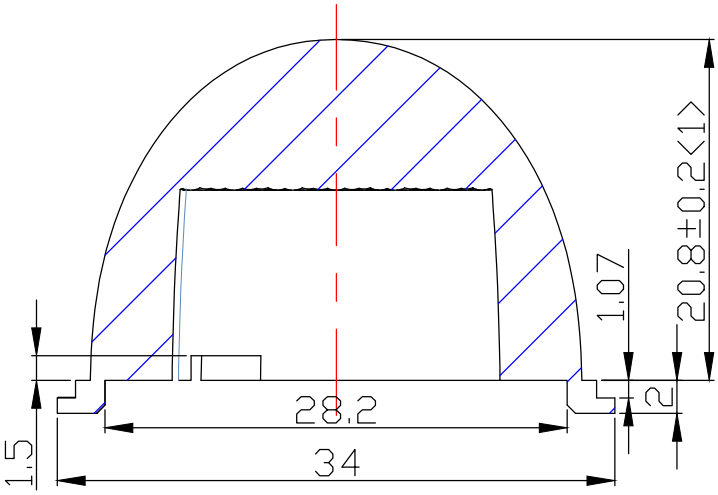

A-A

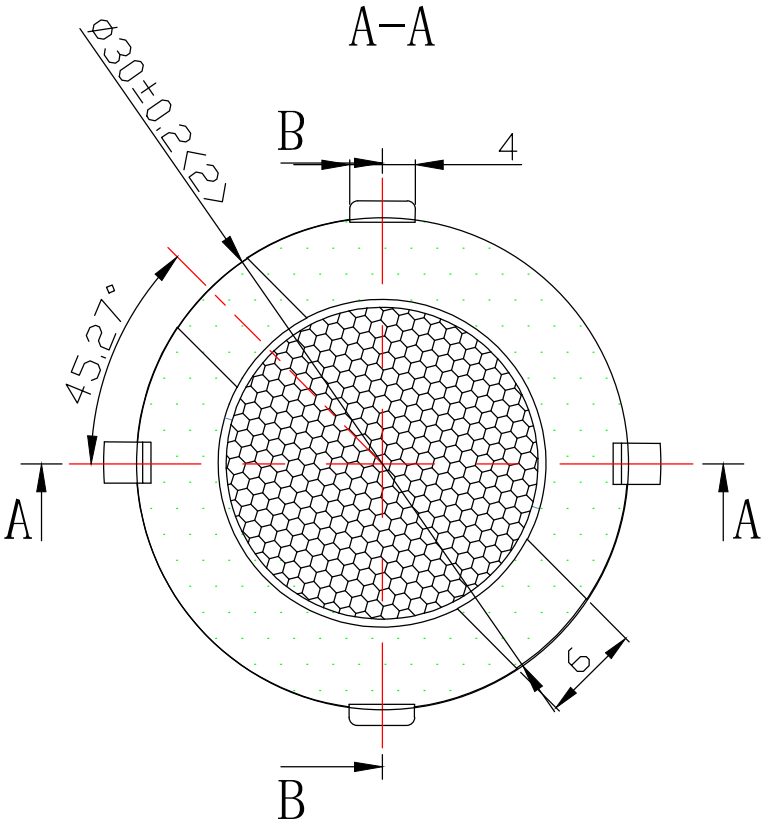

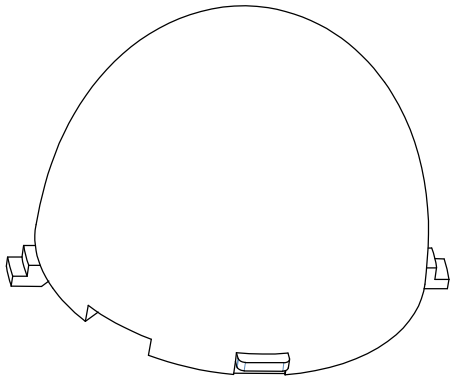

						Material:PC					Nata® NATA Lighting Co.,Ltd	
Mark	Amended Times	Amended Content			Signature	Amended Date					Customer Item	
Controll Version		A2	Design Version	K1	Client Version						Customer Code	NT
Designer			Drawing by		Proportion	1:1					Product Number	92.70.059.00
Technology			Auditor		View							
Approval			Date	2019.03.29	Page	Total_ Page_					Product Name	D75导光柱